Synchronized gantry lift with mounting plates

SR75B2-350-2510-3-A-50X95-22-110-145

Front view

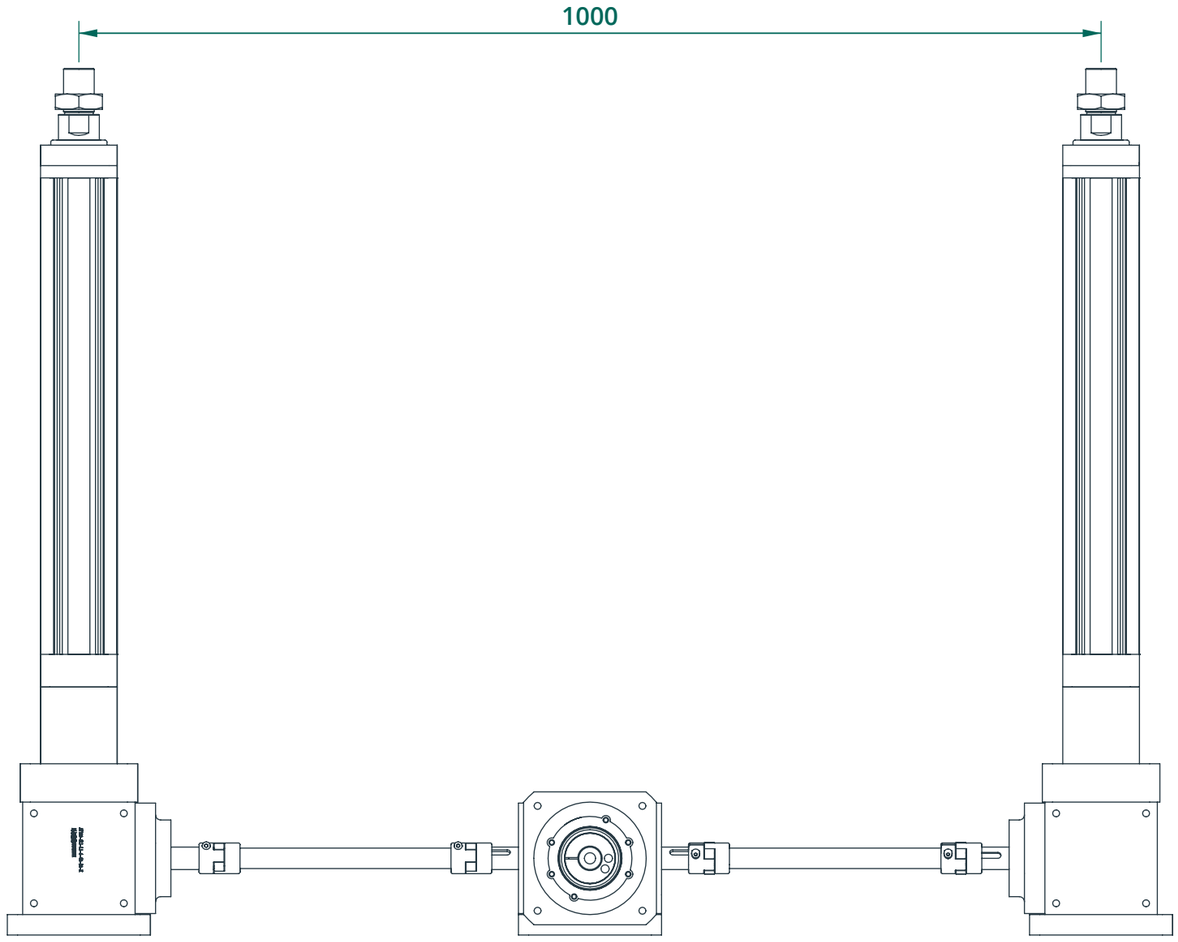

Top view

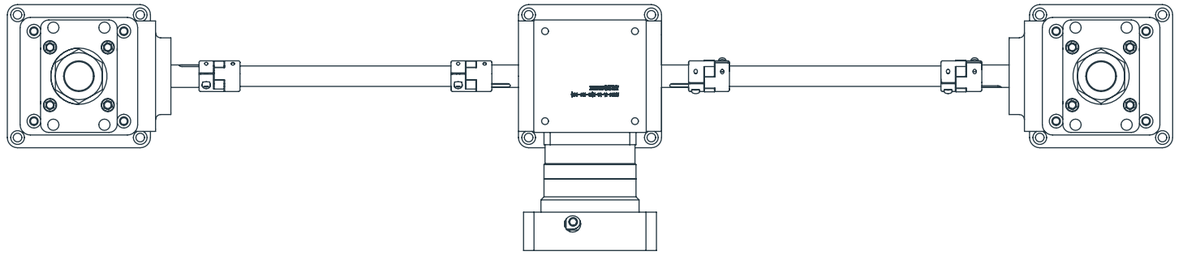

Assembly view

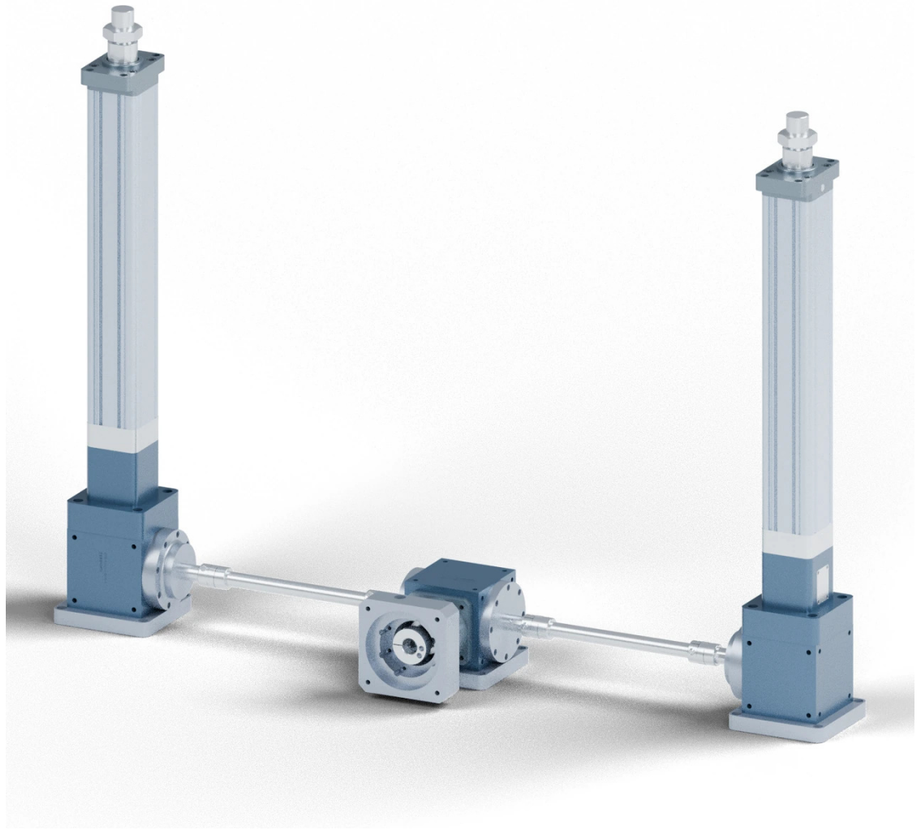

Motor mounting interface

Input bore	**Ø22 mm**
Locating pilot	**Ø110 mm**
Mounting pitch circle	**Ø145 mm**

Reference geometry in the modeled position.

600 kg Synchronized Gantry Lift with Electric Cylinders

ANDANTEX / SR75B2-350-2510-3-A-50X95-22-110-145

A 600 kg lift table transfers automotive parts at a hot press. One 1.5 kW servo motor now drives both ANDANTEX electric cylinders.

Why the customer replaced the air cylinders

As the plant air pressure fluctuated, the table changed speed during travel. It also stopped at different heights from one cycle to the next, leaving parts out of position for transfer.

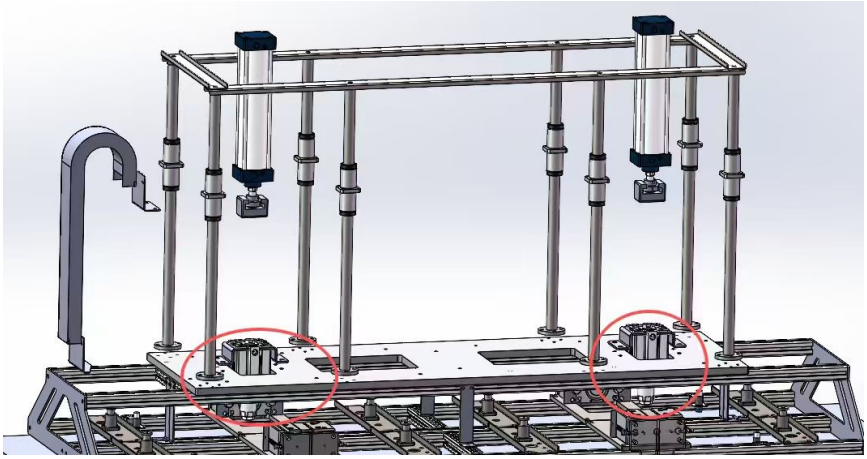

The original lift table with pneumatic cylinders above the transfer station.

The electric retrofit in the machine

AT gearboxes now link both lifting points to the servo. The retrofit resolved the variation in travel speed and stopping height caused by fluctuations in plant air pressure.

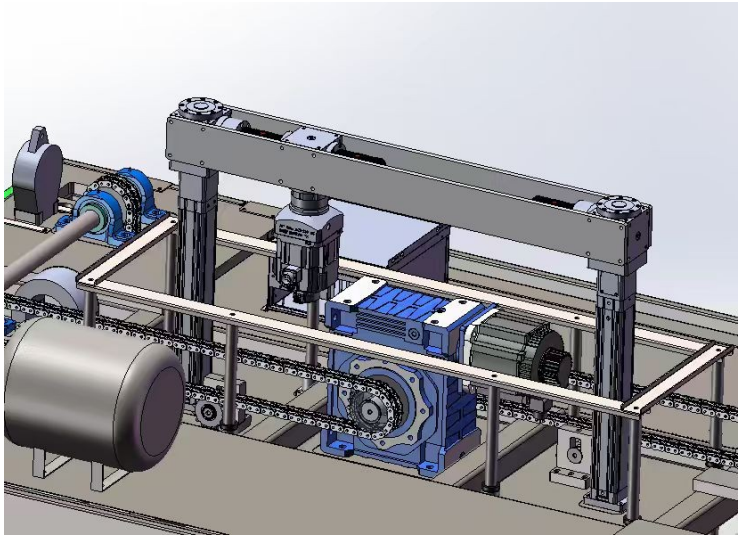

Revised machine layout with the electric gantry above the transfer station.

How one servo drives both electric cylinders

The servo drives a central AT120-FL gearbox with two outputs. A shaft runs from each output to an AT120-FL1 gearbox at the corresponding lift point. Each end gearbox turns the drive through 90° into its electric cylinder. The two lift axes are 1,000 mm apart.



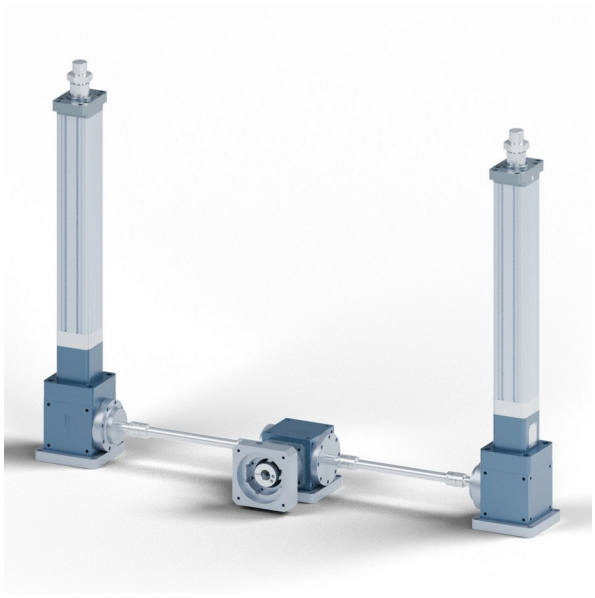

The workshop photo at left shows the cylinders fitted to their end gearboxes. The model at right shows the central gearbox and the shafts linking it to both cylinders.

Why the end gearboxes are paired

Both actuator screws have the same thread hand. The left and right end gearboxes are arranged for opposite drive directions to suit the mirrored layout. Each has a 1:1 ratio, so it redirects the drive at the same shaft speed. With that arrangement, one servo command raises both sides of the table together. Reversing the motor lowers both sides together.

Configuration detail	Value for this gantry
Lift table and axis spacing	600 kg lift table, 1,000 mm between lift axes
Servo input and end gearboxes	One 1.5 kW servo, two 1:1 AT120-FL1 gearboxes
Central gearbox motor interface	Ø22 mm input bore, Ø110 mm pilot, Ø145 mm bolt circle

Sizing a similar lift

Send the moving mass, the spacing between lift points, the required stroke and speed, and the allowable stopping error. Include the motor drawing if you have already selected a servo.

View the gearbox drawings and gantry STEP model · Request a lift configuration